user manual

digital display UDA 100

version 2.1.1

promesstec GmbH I Niedersachsenstraße 4 I D- 48465 Schüttorf I Tel.:+49 (0)5923/ 90 229 0 I Fax:+49 (0)5923/ 90 229 29
E-Mail: office@promesstec.com I Internet: www.promesstec.com

Content

promesstec GmbH I Niedersachsenstraße 4 I D- 48465 Schüttorf I Tel.:+49 (0)5923/ 90 229 0 I Fax:+49 (0)5923/ 90 229 29
E-Mail: office@promesstec.com I Internet: www.promesstec.com

1. General

1.1 For information

- These operating manual provides important information on handling the measuring element. A prerequisite for safe working is compliance with all specified safety notes and instructions for action.
- The qualified personnel must have read and understood these operating manual before mounting and starting up the sensor.
- These operating manual is a component part of the product. Therefore, keep them in a place that is accessible to all users at all times, close to the place of use.
- The local regulations and safety rules applicable to the area of application of the sensor must be observed.
- If the serial number on the type label is no longer readable (e.g. due to mechanical damage), traceability is no longer ensured.
- The sensors described in the user manual are developed and manufactured according to the newest findings. All components are subject strict quality and environmental criteria during production.
- The manufacturer shall not be liable if damage is caused by improper use, non-observance of these operating instructions, use of insufficiently qualified personnel and unauthorized modifications to the sensor.

1.2 Signs and abbreviations

Warning!
Non-observance can lead to injuries to persons and/or destruction of the device. There may be danger to life.

Attention!
Non-observance can lead to incorrect operation of the device or damage to property.

Information!
Non-observance can influence the operation of the device or cause undesired device reactions.

Danger!
If the safety instructions are not observed, there is a risk of serious or fatal injury from electric current.

promesstec GmbH I Niedersachsenstraße 4 I D- 48465 Schüttorf I Tel.:+49 (0)5923/ 90 229 0 I Fax:+49 (0)5923/ 90 229 29
E-Mail: office@promesstec.com I Internet: www.promesstec.com

Warning!

A dangerous situation may possibly occur, which can lead to burns due to hot surfaces or liquids if they are not avoided.

Warning!

This device is designed for connection to hazardous electric voltages. Ignoring this warning can result in severe personal injury or mechanical damage. To avoid the risk of electric shock and fire, the safety instructions of this manual must be observed and the guidelines followed. The specifications must not be exceeded, and the device must only be applied as described in the following. Prior to the commissioning of the device, this manual must be examined carefully. Only qualified personnel (technicians) should install this device. If the equipment is used in manner not specified by the manufacturer, the protection provided by the equipment may be impaired.

Warning!

Until the device is fixed, do not connect hazardous voltages to the device. The following operations should only be carried out on a disconnected device and under ESD-safe conditions:

- Troubleshooting the device.

promesstec GmbH I Niedersachsenstraße 4 I D- 48465 Schüttorf I Tel.:+49 (0)5923/ 90 229 0 I Fax:+49 (0)5923/ 90 229 29
E-Mail: office@promesstec.com I Internet: www.promesstec.com

Triangle with exclamation mark: Read the manual before installation and commissioning of the device in order to avoid incidents that could lead to personal injury or mechanical damage. Warning / demand. Potentially lethal situations.

The CE-Mark proves the compliance of the device with the essential requirements of the directives.

The double insulation symbol shows that the device is protected by double or reinforced insulation.

2. transport, packaging and storage

2.1 transport

Inspect the device for any damage that may have occurred during transport. Report obvious damage immediately.

2.2 packaging

Do not remove the packaging until immediately before assembly. Keep the packaging, because it provides optimal protection during transport (e. g. changeable installation location, return).

2.3 storage

Avoid the following influences during longer storage:

- Direct sunlight or close to hot objects
- Mechanical vibration, mechanical shock (hard set up)
- Soot, steam, dust and corrosive gases

If possible, store the device in the original packaging or appropriate packaging.

promesstec GmbH I Niedersachsenstraße 4 I D- 48465 Schüttorf I Tel.:+49 (0)5923/ 90 229 0 I Fax:+49 (0)5923/ 90 229 29
E-Mail: office@promesstec.com I Internet: www.promesstec.com

3. Safety rules

! Further important safety instructions can be found in the individual chapters.

Definitions:

Hazardous voltages have been defined as the ranges: 75 to 1500 Volt DC, and 50 to 1000 Volt AC.

Technicians are qualified persons educated or trained to mount, operate, and also trouble-shoot technically correct and in accordance with safety regulations.

Operators, being familiar with the contents of this manual, adjust and operate the knobs or potentiometers during normal operation.

Receipt and unpacking:
Unpack the device without damaging it and check whether the device type corresponds to the one ordered. The packaging should always follow with the device until this has been permanently mounted.

3.1 Intended use of the product

Environment:

Avoid direct sun light, dust, high temperatures, mechanical vibrations and shock, rain and heavy moisture. If necessary, heating is excess of the stated limits for ambint tempertures should be avoided by way of ventilation. All devices fall under installation categor II, pollution degree 2, and insulation class II.

promesstec GmbH I Niedersachsenstraße 4 I D- 48465 Schüttorf I Tel.:+49 (0)5923/ 90 229 0 I Fax:+49 (0)5923/ 90 229 29
E-Mail: office@promesstec.com I Internet: www.promesstec.com

3.2 Personnel qualification

Warnung

Risk of injury due to insufficient qualification. Improper handling can lead to considerable personal injury and property damage.
The activities described in these operating instructions may only be performed by qualified personnel with the following qualifications carry out.
Keep unqualified personnel away from the hazardous areas.

For mounting and commissioning of the sensor, these persons must be familiar with the applicable country-specific directives and standards, and have the appropriate qualification. You must have knowledge of measurement and control technology, be familiar with electrical circuits and be able to carry out the work described and recognize possible hazards independently. Depending on the operating conditions, other knowledge may also be required, e.g. about aggressive media.

3.3 Special hazards

Warnung

Observe the country-specific regulations (e.g. standards) and, in the case of special applications, observe the applicable standards and directives (e.g. for hazardous media such as Acetylene, flammable or toxic substances as well as refrigeration plants and compressors).
If the relevant regulations are not observed, serious personal injury and damage to property may result!

Warnung

Electrostatic discharge (ESD) protection is required. Proper use of grounded work surfaces and personal wrist straps is required when working with open circuits (printed circuit boards) to prevent damage to sensitive electronic components from electrostatic discharge.

Gefahr

There is danger to life from electric current. There is an immediate risk of death if live parts are touched. Installation and mounting of electrical equipment may only be carried out by qualified electricians. When operating with a defective power supply unit (e.g. short-circuit from mains voltage to output voltage), life-threatening voltages can result at the device.

Warnung

Residual media in devices that have been removed can be hazardous to persons, the environment and equipment. Sufficient safety precautions are to be taken. This device must not be used in safety or emergency stop devices. Incorrect applications of the device can lead to injuries. In the case of a fault, aggressive media at extreme temperatures and under high pressure or vacuum may be present at the device.

promesstec GmbH I Niedersachsenstraße 4 I D- 48465 Schüttorf I Tel.:+49 (0)5923/ 90 229 0 I Fax:+49 (0)5923/ 90 229 29
E-Mail: office@promesstec.com I Internet: www.promesstec.com

4. Commissioning and operation

4.1 Before mounting

Check whether a complete digital display has been supplied. Inspect the device for any transport damage that may have occurred. If such damage is present, notify the carrier and supplier immediately. Keep the packaging, as it provides optimum protection during transport. Make sure that the housing and the connection contacts are not damaged.

4.2 Calibration and adjustment / operation in normal mode

Calibration and adjustment
During calibration and adjustment, the measuring and connection of external voltages must be carried out according to the specifications of this manual. The technician must use tools and instruments that are safe to use.

Normal operation
Operators are only allowed to adjust and operate devices that are safely fixed in panels injury and damage. This means there is no electrical shock hazard, and the device is easily accessible.

promesstec GmbH I Niedersachsenstraße 4 I D- 48465 Schüttorf I Tel.:+49 (0)5923/ 90 229 0 I Fax:+49 (0)5923/ 90 229 29
E-Mail: office@promesstec.com I Internet: www.promesstec.com

5. front- and back layout

front UDA 100:

back UDA 100:

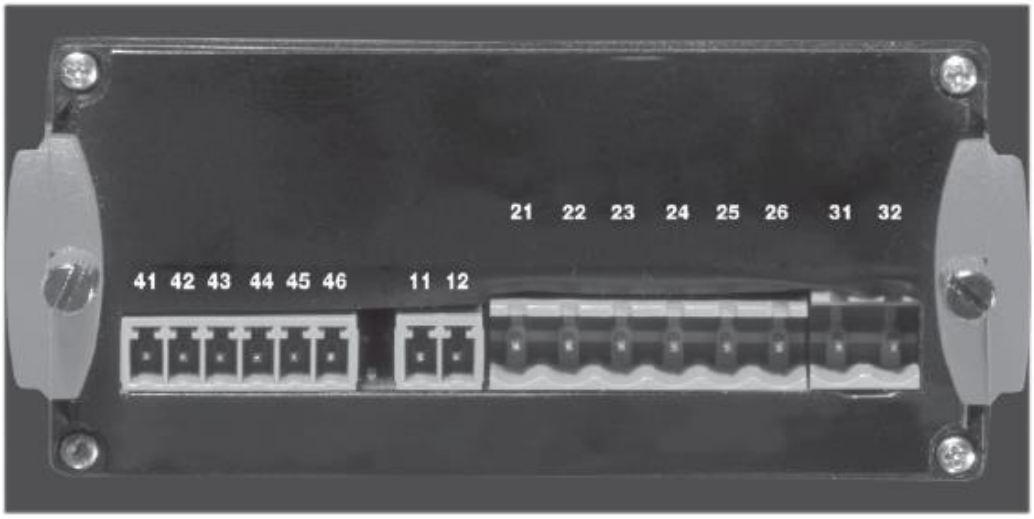

promesstec GmbH I Niedersachsenstraße 4 I D- 48465 Schüttorf I Tel.:+49 (0)5923/ 90 229 0 I Fax:+49 (0)5923/ 90 229 29
E-Mail: office@promesstec.com I Internet: www.promesstec.com

6. Programmable LED indicator UDA 100

• 4-digit 14-segment LED indicator
• input for mA, V, potentiometer, Ohm, RTD and TC
• 2 relays and analog output
• universal voltage supply
• front key programmable

Application

- Display of digital readout of current, voltage, resistance, temperature or potentiometer signals.
- Process control with 2 pairs of potential-free relays and / or analog output.
- For local readout in extremely wet atmospheres with a specially designed splash-proof cover.

Technical characteristics

- 4-digit LED indicator with 13,8 mm 14-segment characters. Max. display readout -1999…9999 with programmable decimal point, relay ON / OFF indication.
- All operational parameters can be adjusted to any application by use of the front keys.
- the UDA100 is available fully-configured acc. to specifications ready for process control and visualisation.
- Help texts in eight languages can be selected via a menu item.
- Inputs, outputs, and supply are floating and galvanically separated.
- In versions with relay outputs the user can minimise the installation test time by activating / deactivating each relay independently of the input signal.

Mounting

- To be mounted in front panel. The included rubber packing must be mounted between the panel cutout hole and the display front to obtain a protection degree of IP65. For extra protection in extreme environments, the UDA 100 can be delivered with a speially designed splash-proof cover as accessory.

promesstec GmbH I Niedersachsenstraße 4 I D- 48465 Schüttorf I Tel.:+49 (0)5923/ 90 229 0 I Fax:+49 (0)5923/ 90 229 29
E-Mail: office@promesstec.com I Internet: www.promesstec.com

7. Applications

Input signals:

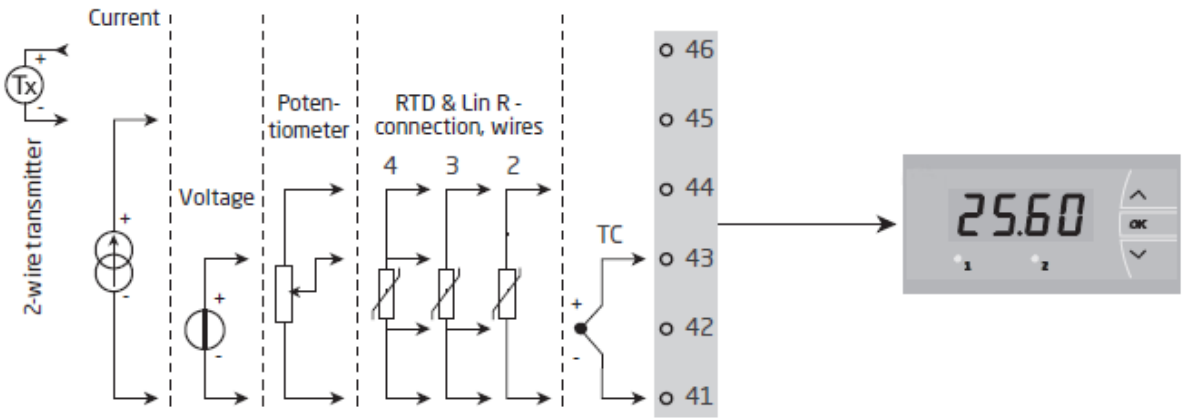

Output signals:

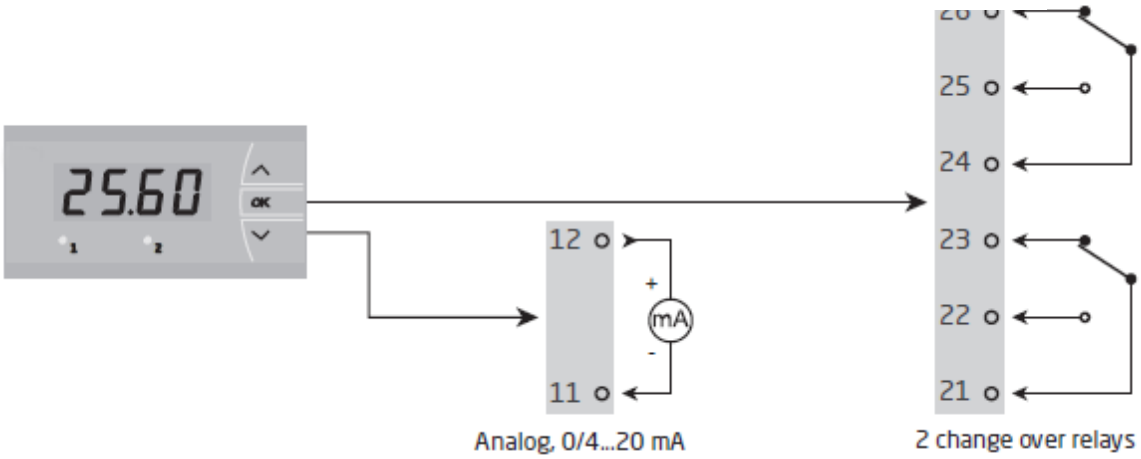

Supply:

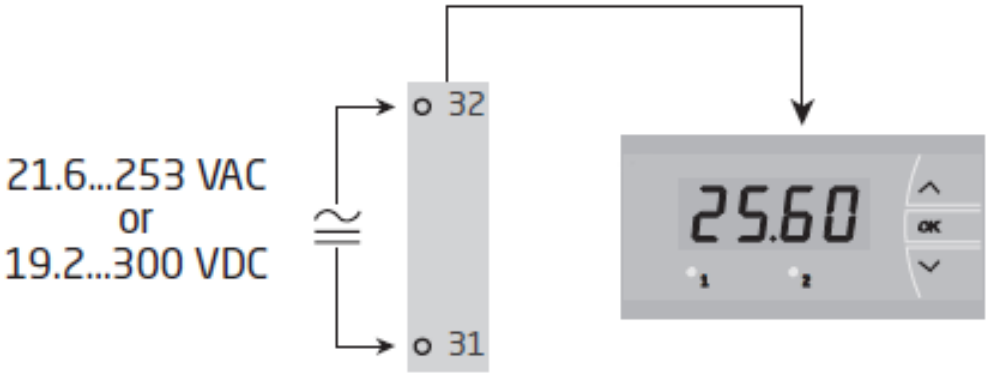

promesstec GmbH I Niedersachsenstraße 4 I D- 48465 Schüttorf I Tel.:+49 (0)5923/ 90 229 0 I Fax:+49 (0)5923/ 90 229 29
E-Mail: office@promesstec.com I Internet: www.promesstec.com

Order details

UDA 100-B-A = 2 relays
UDA 100-B-B = analog output and 2 relays

NB! Please order the splash-proof cover seperately.

8. Electrical specifications

Environmental conditions
Ambient operating temperature range. . . . . -20°C to +60°C
Calibration temperature . . . . . 20°C…28°C
Humidity . . . . . .< 95% RF (non-cond.)
Protection degree (mounted in panel) IP65

Mechanical specifications
Dimensions (HxWxD) . . . . . .48 x 96 x 120 mm
Cutout dimensions . . . . . .44,5 x 91,5 mm
Weight . . . . . 230 g
Wire size, pin 41...46 max. . . . . 0,05...1,31 mm^2 / AWG
30...16 stranded wire
Wire size, other max. . . . . .0,05...3,31 mm^2 / AWG
30...12 stranded wire
Vibration . . . . . .IEC 60068-2-6
2...13,2 Hz . . . . . .±1 mm
13,2...100 Hz. . . . . .±0,7 g

Common specifications
Supply voltage, universal. . . . . .21,6...253 VAC, 50...60 Hz
or 19,2...300 VDC

Type	International power dissipation	Max. required power
UDA 100-B-A	2,7 W	3,0 W
UDA 100-B-B	3,2 W	3,5 W

Isolation voltage, test /operation . . . . . .2,3 kVAC / 250 VAC
Signal / noise ratio . . . . . Min. 60 dB (0...100 kHz)
Response time (0...90%, 100...10%), programmable:
Temperature input . . . . . 1…60 s
Current / voltage input . . . . . 0,4…60 s

Accuracy, the greater of the general and basic values:

General values		
Input type	Absolute accuracy	Temperature coefficient
All	≤ ±0,1% of reading	≤ ±0,1% of reading / °C

promesstec GmbH I Niedersachsenstraße 4 I D- 48465 Schüttorf I Tel.:+49 (0)5923/ 90 229 0 I Fax:+49 (0)5923/ 90 229 29
E-Mail: office@promesstec.com I Internet: www.promesstec.com

Basic values		
Input type	Basic accuracy	Temperature coefficient
mA	≤ ±4 µA	≤ ± 0,4 µA / °C
Volt	≤ ±20 µV	≤ ± 2 µV / °C
Pt100	≤ ±0,2°C	≤ ± 0,01°C / °C
Linear resistance	≤ ± 0,1°Ω	≤ ± 0,01°Ω / °C
Potentiometer	≤ ± 0,1°Ω	≤ ± 0,01°Ω / °C
TC type: E, J, K, L, N, T, U	≤ ± 1°C	≤ ± 0,05°C / °C
TC type: R, S, W3, W5, LR	≤ ± 2°C	≤ ± 0,2°C / °C
TC type: B 85…200°C	≤ ± 4°C	≤ ± 0,4°C / °C
TC type: B 200…1820°C	≤ ± 2°C	≤ ± 0,2°C / °C

EMC - Immunity influence. . . . . ≤ ± 0,5% of readout

Auxiliary supply:
2-wire supply, pin 46...45 . . . . . 25...15 VDC / 0...20 mA

TC input

Type	Min. value	Max. value	Standard
B	0°C	+1820°C	IEC 60584-1
E	-100°C	+1000°C	IEC 60584-1
J	-100°C	+1200°C	IEC 60584-1
K	-180°C	+1372°C	IEC 60584-1
L	-200°C	+900°C	DIN 43710
N	-180°C	+1300°C	IEC 60584-1
R	-50°C	+1760°C	IEC 60584-1
S	-50°C	+1760°C	IEC 60584-1
T	-200°C	+400°C	IEC 60584-1
U	-200°C	+600°C	DIN 43710
W3	0°C	+2300°C	ASTM E988-90
W5	0°C	+2300°C	ASTM E988-90
LR	-200°C	+800°C	GOST 3044-84

Cold Junction compensation (CJC) via internal sensor. . . . . ±(2,0°C + 0,4°C * Δt)
Δt = Internal temperature – ambient temperature

promesstec GmbH I Niedersachsenstraße 4 I D- 48465 Schüttorf I Tel.:+49 (0)5923/ 90 229 0 I Fax:+49 (0)5923/ 90 229 29
E-Mail: office@promesstec.com I Internet: www.promesstec.com

Sensor error detection, all TC types . . . . . Yes < ±1,0 °C
Sensor error current:
when detecting. . . . . Nom. 2 µA
else. . . . . 0 µA

RTD, linear resistance and potentiometer input

Input type	Min. value	Max. value	Standard
PT10…PT1000	-200°C	+850°C	IEC 60751
Ni50…Ni1000	-60°C	+250°C	DIN 43760
Cu10…Cu100	-200°C	+260°C	α = 0,00427
Lin. R	0 Ω	10000 Ω	-
Potentiometer	10 Ω	100 kΩ	-

input for RTD types:
Pt10, Pt20, Pt50, Pt100, Pt200, PT250, Pt300, Pt400, Pt500, Pt1000
Ni50, Ni100, Ni120, Ni1000, Cu10, Cu20, Cu50, Cu100
Cable resistance pr. wire, RTD (max.) . . . . . .50 Ω
Sensor current, RTD . . . . . Nom. 0,2 mA
Effect of sensor cable resistance (3- / 4-wire), RTD . . . . . < 0,002 Ω / Ω
Sensor error detection, RTD . . . . . Ja
Short curcuit detection, RTD. . . . . < 15 Ω

Current input
Measurment range. . . . . 0...23 mA
Programmable measurment ranges. . . . . 0...20 and 4...20 mA
Input resistance . . . . . Nom. 20 Ω + PTC 25 Ω
Sensor error detection:
loop break 4...20 mA . . . . . Yes

Voltage input:
Measurment range. . . . . .0...12 VDC
Programmable measurment ranges. . . . . .0...1 / 0,2...1 / 0...10 / 2...10 VDC
Input resistance . . . . . Nom. 10 MΩ

Outputs

Display
Display readout . . . . . -1999...9999 (4 digits)
Decimal point. . . . . Programmable
Digit height . . . . . 13,8 mm
Display updating . . . . . 2,2 times / s
Input outside input range is indicated by . . . . . .Explanatory text

promesstec GmbH I Niedersachsenstraße 4 I D- 48465 Schüttorf I Tel.:+49 (0)5923/ 90 229 0 I Fax:+49 (0)5923/ 90 229 29
E-Mail: office@promesstec.com I Internet: www.promesstec.com

Current output

Signal range (span). . . . . 0...23 mA
Programmable signal ranges . . . . . 0...20 / 4...20 / 20...0 /20...4 mA
Load (max.) . . . . . ≤ 800 Ω
Load stability . . . . . ≤ 0,01% of span / 100 Ω
Sensor error detection . . . . . 0 / 3,5 / 23 mA / none
NAMUR NE 43 up / downscale . . . . . 23 mA / 3,5 mA
Output limitation:
On 4…20 and 20…4mA signals. . . . . 3,8…20,5mA
On 0…20 and 20…0mA signals. . . . . 0…20,5mA
Current limit. . . . . .≤ 28 mA

Relay outputs

Relay function. . . . . Setpoint
Hysteresis . . . . . .0...100%
On and Off delay. . . . . 0...3600 s
Sensor error detection. . . . . .Make / Break / Hold
Max. voltage . . . . . .250 VAC / VDC
Max. AC current. . . . . 2 A
Max. AC power. . . . . 500 VA
Max. DC current, resistive load:
@ U_{Relay} ≤ 30 VDC . . . . . 2 ADC
@ U_{Relay} > 30 VDC . . . . . .[1380 x U^{-2}_{Relay} x $1{,}0085^{U_{Relay}}$] ADC

Graphic depiction of [1380 x U^{-2}_{Relay} x $1{,}0085^{U_{Relay}}$]:

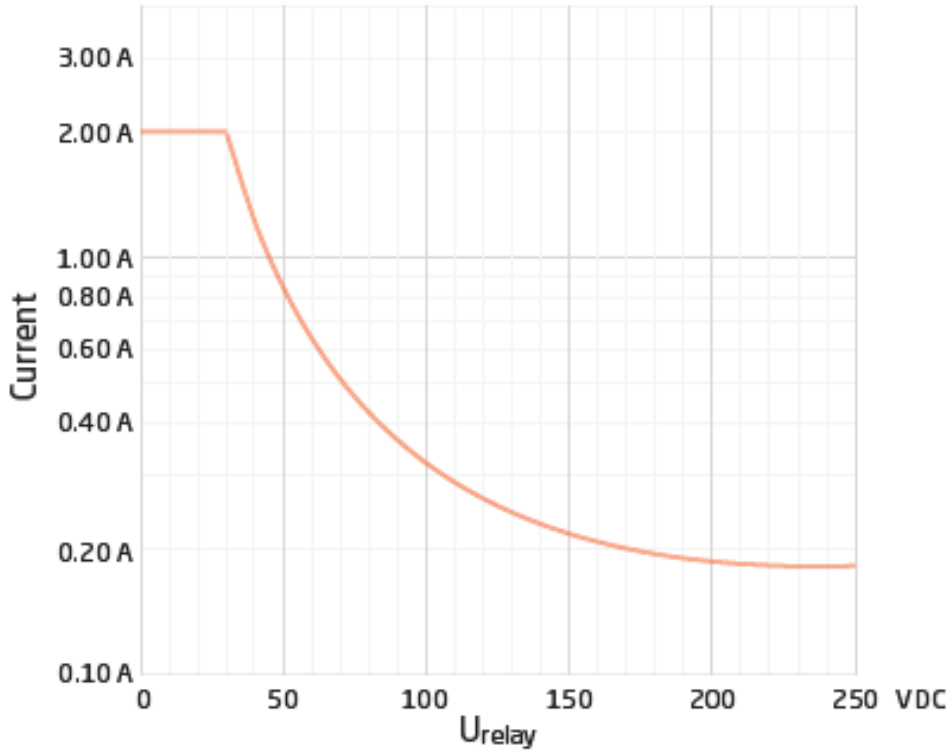

promesstec GmbH I Niedersachsenstraße 4 I D- 48465 Schüttorf I Tel.:+49 (0)5923/ 90 229 0 I Fax:+49 (0)5923/ 90 229 29
E-Mail: office@promesstec.com I Internet: www.promesstec.com

Sensor error detection / Sensor error detection outside range

Sensor error check in UDA 100 variants		
Variant	**Configuration**	**Sensor error detection**
UDA 100-B-A	ERR1=NONE, ERR2=NONE:	OFF
	else:	ON
UDA 100-B-B	ERR1=NONE, ERR2=NONE, O.ERR=NONE:	OFF
	else:	ON

Outside range readout (IN.LO, IN.HI): If the valid range of the A/D converter or the polynomial is exceeded.			
Input	**Range**	**Readout**	**Limit**
VOLT	0...1 V / 0,2...1 V	IN.LO	< -25 mV
		IN.HI	> 1,2 V
	0...10 V / 2...10 V	IN.LO	< -25 mV
		IN.HI	> 12 V
CURR	0...20 mA / 4...20 mA	IN.LO	< -1,05 mA
		IN.HI	> 25,05 mA
POTM	-	IN.LO	< -0,5%
		IN.HI	> 100,5%
TEMP	TC / RTD	IN.LO	< temperature range -2°C
		IN.HI	> temperature range +2°C
LIN. R	0...800 ohm	IN.LO	< 0 ohm
		IN.HI	> 1 kohm
	0...10 kohm	IN.LO	< 0 ohm
		IN.HI	> 15 kohm

Sensor error detection (SE.BR, SE.SH)			
Input	**Range**	**Readout**	**Limit**
CURR	Loop break (4...20 mA)	SE.BR	<= 3,6 mA; > = 21 mA
TEMP	TC	SE.BR	> ca. 750 kohm / (1,25 V)
	RTD, 2-, 3- & 4-wire, No SE.SH for Cuxx, Pt10, Pt20 and Pt50	SE.BR	> 12 kohm
		SE.SH	< 15 ohm
LIN. R	0...800 ohm	SE.BR	> 875 ohm
	0...10 kohm	SE.BR	> 12 kohm

promesstec GmbH I Niedersachsenstraße 4 I D- 48465 Schüttorf I Tel.:+49 (0)5923/ 90 229 0 I Fax:+49 (0)5923/ 90 229 29
E-Mail: office@promesstec.com I Internet: www.promesstec.com

Display readout below min. / above max. (-1.9.9.9, 9.9.9.9)			
Input	**Range**	**Readout**	**Limit**
CURR VOLT	All	-1.9.9.9	Display readout <-1999
		9.9.9.9	Display readout > 9999
LIN. R	All	-1.9.9.9	Display readout <-1999
		9.9.9.9	Display readout > 9999
POTM	-	-1.9.9.9	Display readout <-1999
		9.9.9.9	Display readout > 9999

Readout at hardware error		
Error search	**Readout**	**Cause**
Text of Internal communication µC / ADC	HW.ER	Permanent error in ADC
Test of internal CJC sensor	CJ.ER	CJC sensor defect
Checksum test of the configuration in RAM	RA.ER	Error in RAM
Checksum test of the configuration in the EEPROM	EE.ER	Error in EEPROM

! Error Indications in the display blink once a second. The help text explains the error.

promesstec GmbH I Niedersachsenstraße 4 I D- 48465 Schüttorf I Tel.:+49 (0)5923/ 90 229 0 I Fax:+49 (0)5923/ 90 229 29
E-Mail: office@promesstec.com I Internet: www.promesstec.com

9. Connections

Inputs:

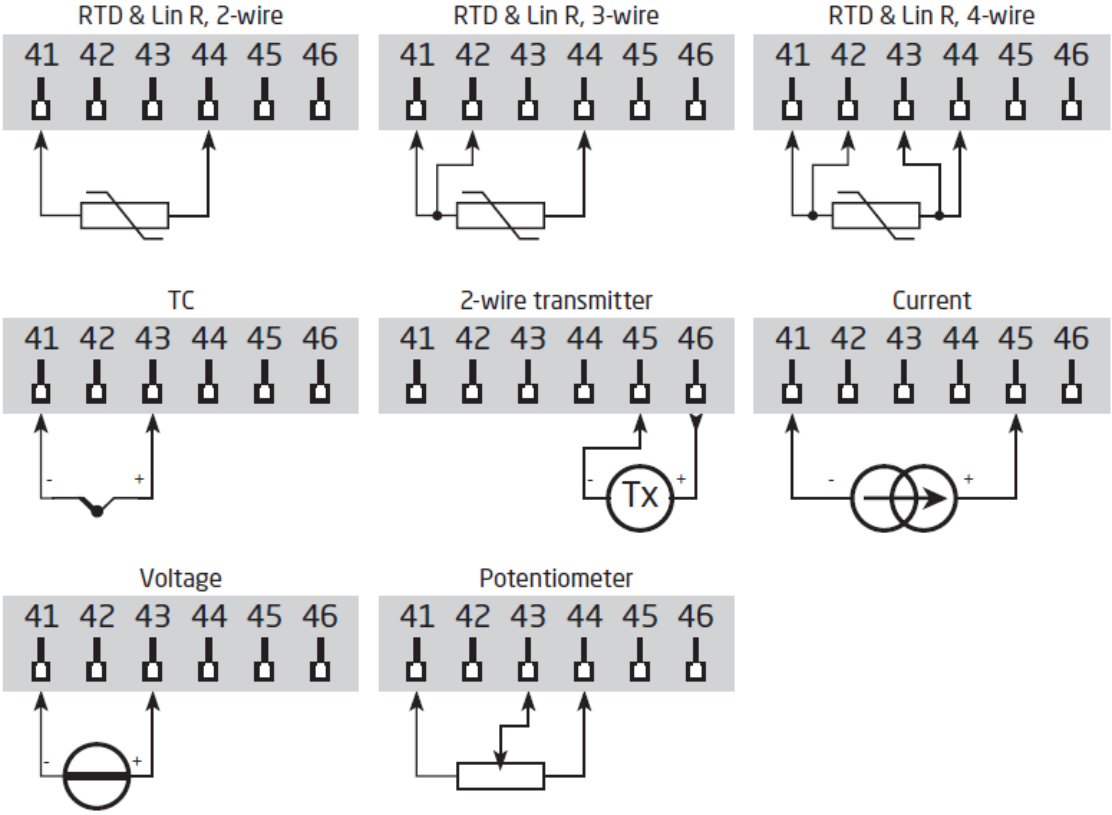

outputs:

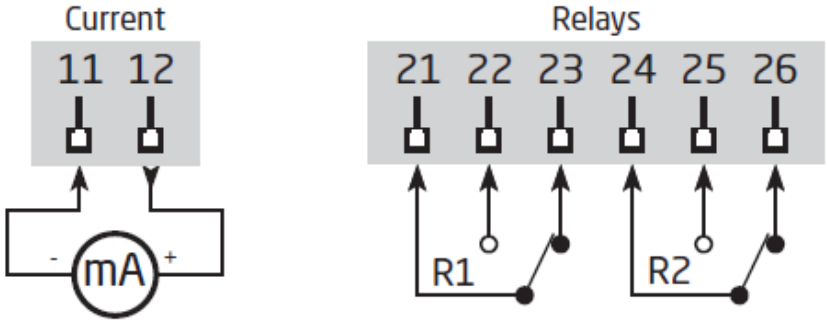

Supply:

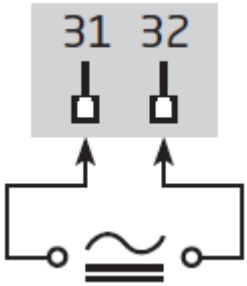

promesstec GmbH I Niedersachsenstraße 4 I D- 48465 Schüttorf I Tel.:+49 (0)5923/ 90 229 0 I Fax:+49 (0)5923/ 90 229 29
E-Mail: office@promesstec.com I Internet: www.promesstec.com

10. Block diagram

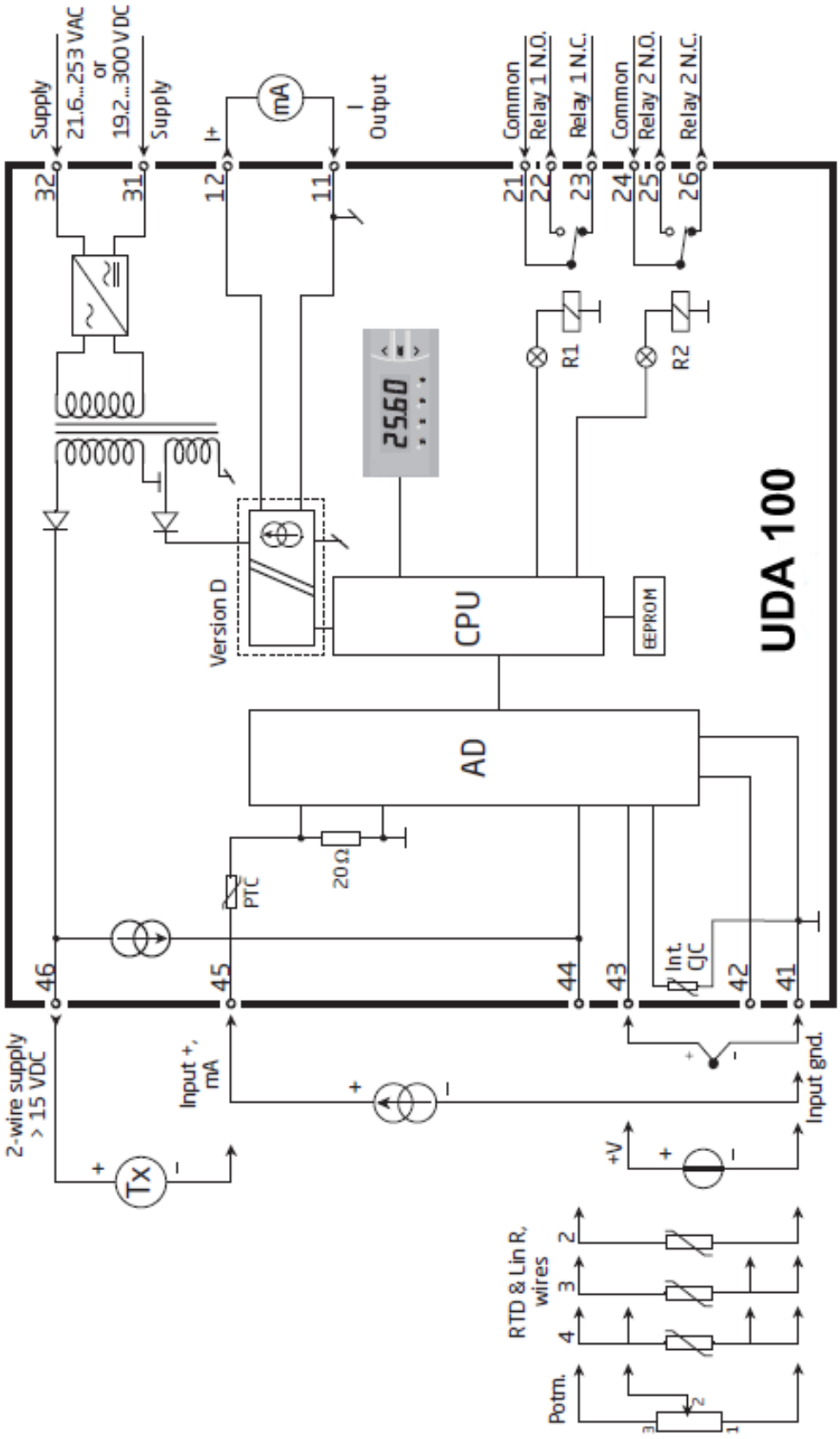

promesstec GmbH I Niedersachsenstraße 4 I D- 48465 Schüttorf I Tel.:+49 (0)5923/ 90 229 0 I Fax:+49 (0)5923/ 90 229 29
E-Mail: office@promesstec.com I Internet: www.promesstec.com

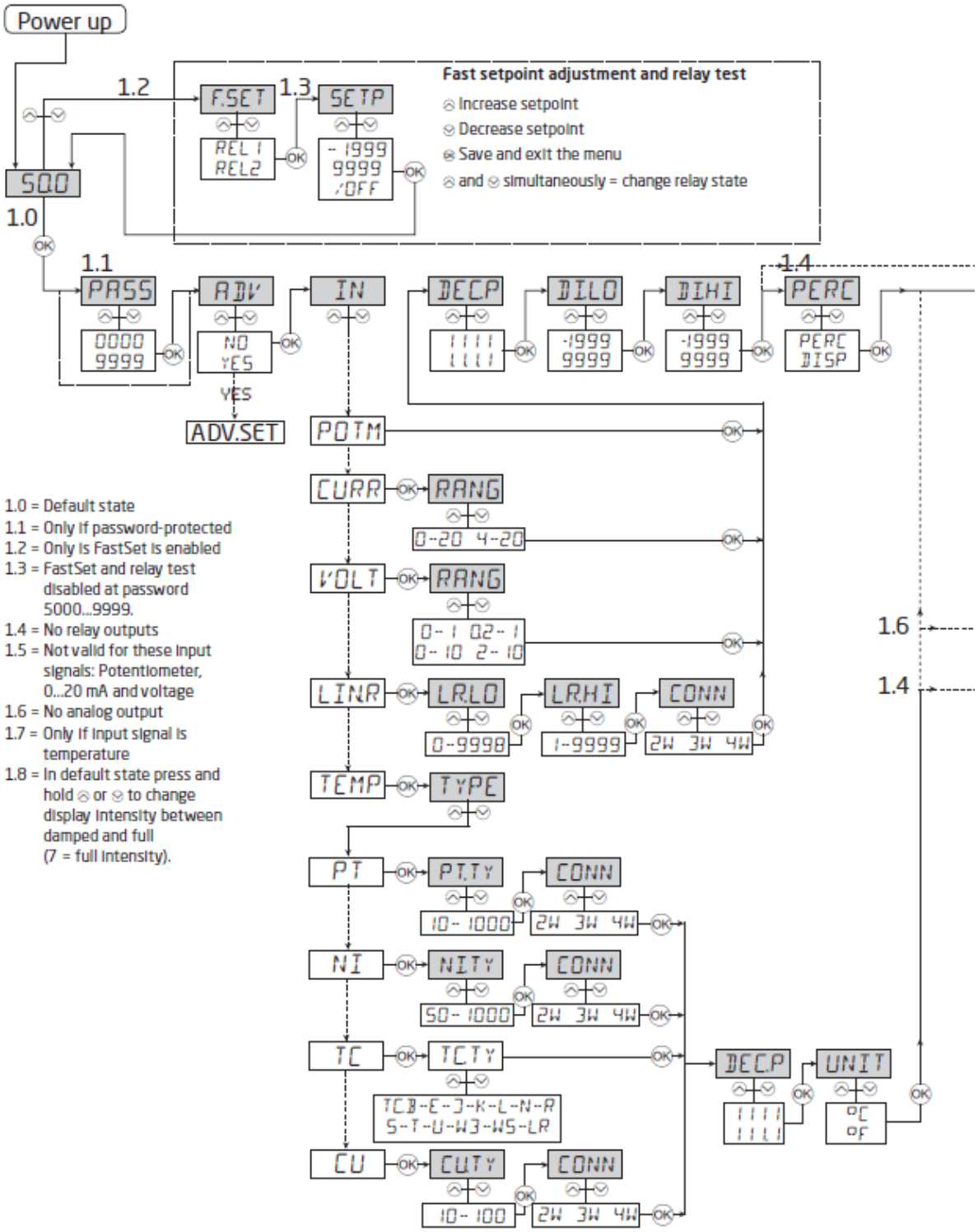

promesstec GmbH I Niedersachsenstraße 4 I D- 48465 Schüttorf I Tel.:+49 (0)5923/ 90 229 0 I Fax:+49 (0)5923/ 90 229 29
E-Mail: office@promesstec.com I Internet: www.promesstec.com

11. Routing diagram

If no keys are activated for 2 minutes the display returns to default state 1.0 without saving configuration changes.

- Increase value / choose next parameter.
- Decrease value / choose previous parameter.
- Accept the chosen parameters and go to the next menu.

Hold OK Back to previous parameter / return to menu 1.0 without saving.

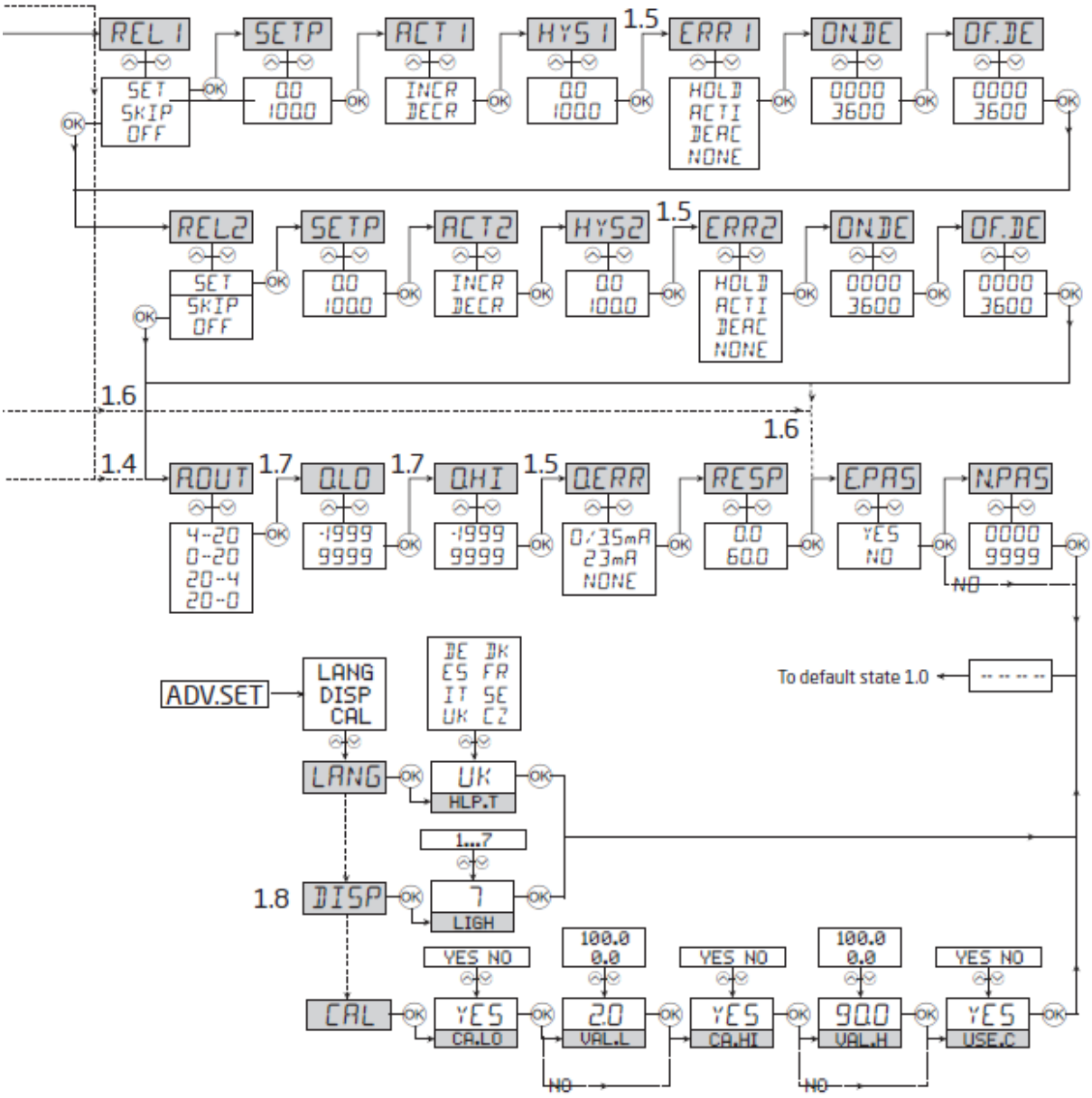

promesstec GmbH I Niedersachsenstraße 4 I D- 48465 Schüttorf I Tel.:+49 (0)5923/ 90 229 0 I Fax:+49 (0)5923/ 90 229 29
E-Mail: office@promesstec.com I Internet: www.promesstec.com

12. Scrolling help text

Display in default state xxxx, hardware error:

SE.BR	→	sensor wire breakage
SE.SH	→	sensor short circuit
IN.HI	→	input overrange
IN.LO	→	input underrange
9.9.9.9	→	display overrange
-1.9.9.9	→	display underrange
HW.ER	→	hardware error
EE.ER	→	EEPROM error- Check cofiguration
RA.ER	→	RAM memory error
CJ.ER	→	CJC sensor error
NO.CA	→	device not calibrated

FastSet (Enabled):

F.SET

REL1	→	fast set menu
REL2	→	select relay

SETP

xxxx	→	relay setpoint - press OK to save

FastSet (Disabled):

SETP

xxxx	relay setpoint - read only

Configuration menu:

Yes	→	enter advanced setup menu
NO		

PASS

xxxx	→	set correct password

IN

C.LIN*	→	text entered by user in preset
CURR	→	current input
VOLT	→	voltage input
POTM	→	potentiometer input
LIN.R	→	linear resistance input
TEMP	→	temperature sensor input

RANG		**(for current input)**
0-20	→	input range in mA
4-20	→	input range in mA

RANG		**(for voltage input)**
0-10	→	input range in Volt
2-10	→	input range in Volt
0.0-1	→	input range in Volt
0.2-1	→	input range in Volt

DEC.P

1111	→	decimal point position
111.1	→	decimal point position
11.11	→	decimal point position
1.111	→	decimal point position

LR.LO

xxxx	→	set resistace value LOW

DI.HI

xxxx	→	display readout HIGH

REL.U

PERC	→	set relay in percentage
DISP	→	set relay in display units

TYPE

CU	→	select CU sensor type
PT	→	select PT sensor type
NI	→	select NI sensor type
TC	→	select TC sensor type

CU.TY

10	→	select CU sensor type
20	→	select CU sensor type
50	→	select CU sensor type
100	→	select CU sensor type

PT.TY

10	→	select PT sensor type
20	→	select PT sensor type
50	→	select PT sensor type
100	→	select PT sensor type
200	→	select PT sensor type
250	→	select PT sensor type
300	→	select PT sensor type
400	→	select PT sensor type
500	→	select PT sensor type
1000	→	select PT sensor type

NI.TY

50	→	select NI sensor type
100	→	select NI sensor type
120	→	select NI sensor type
1000	→	select NI sensor type

CONN		**(at Cu, Pt and Ni sensor)**
2W	→	select 2-wire sensor connection
3W	→	select 3-wire sensor connection
4W	→	select 4-wire sensor connection

TC.TY

TC.B	→	select TC sensor type
TC.E	→	select TC sensor type
TC.J	→	select TC sensor type
TC.K	→	select TC sensor type
TC.L	→	select TC sensor type
TC.N	→	select TC sensor type
TC.R	→	select TC sensor type
TC.S	→	select TC sensor type
TC.T	→	select TC sensor type
TC.U	→	select TC sensor type
TC.W3	→	select TC sensor type
TC.W5	→	select TC sensor type
TC.LR	→	select TC sensor type

promesstec GmbH I Niedersachsenstraße 4 I D- 48465 Schüttorf I Tel.:+49 (0)5923/ 90 229 0 I Fax:+49 (0)5923/ 90 229 29
E-Mail: office@promesstec.com I Internet: www.promesstec.com

LR.HI
xxxx → set resistance value HIGH

DI.LO
xxxx → display readout LOW

REL1
OFF → relay 1 disabled
SET → enter relay 1 setup
SKIP → skip relay 1 setup

SETP
xxxx → relay setpoint

ACT1
INCR → activate at increasing signal
DECR → activate at decreasing signal

HYS1
xxxx → relay hysteresis

ERR1
HOLD → hold relay at error
ACTI → activate relay at error
DEAC → deactivate relay at error
NONE → undefined state at error

ON.DE
xxxx → relay on-delay in seconds

OF.DE
xxxx → relay off-delay in seconds

REL2
OFF → relay 2 disabled
SET → enter relay 2 setup
SKIP → skip relay 2 setup

SETP
xxxx → relay setpoint

ACT2
INCR → activate at increasing signal
DECR → activate at decreasing signal

HYS2
xxxx → relay hysteresis

ERR2
HOLD → hold relay at error
ACTI → activate relay at error
DEAC → deactivate relay at error
NONE → undefined status at error

ON.DE
xxxx → relay on-delay in seconds

OF.DE
xxxx → relay off-delay in seconds

DEC.P **(at temperature input)**
1111 → decimal point position
111.1 → decimal point position

UNIT
°C → display and relay setup in Celsius
°F → display and relay setup in Fahrenheit

O.LO
xxxx → display value for output LOW

O.HI
xxxx → display value for output HIGH

O.ERR
23mA → NAMUR NE43 upscale at error
3,5mA → NAMUR NE43 downscale at error
0mA → downscale at error
NONE → undefined output at error

RESP
xxx.x → analogue output response time in seconds

E.PAS
NO → enable password protection
YES

N.PAS
xxxx → select new password

ADV MENU:
LANG → enter language setup
DISP → enter display setup
CAL → perform process calibration

HLP.T
DE → DE – Wähle Deutschen Hilfetext
DK → DK – Vaelg Densk hjaelpetekst
ES → ES – Seleccionar texto de ajuda en espanol
FR → FR – Selection Texte d´aide en francais
IT → IT – Selezionare testi di aiuto italiani
SE → SE – Valj svensk hjalptext
UK → UK – Select english helptext
CZ → CZ – Vyber ceskou Napovedu

LIGH
xxxx → adjust display light intensity

CA.LO
YES → calibrate input LOW to process value?
NO

CA.HI
YES → calibrate input HIGH to process value?
NO

VAL.L
xxxx → set value for low calibration point

promesstec GmbH I Niedersachsenstraße 4 I D- 48465 Schüttorf I Tel.:+49 (0)5923/ 90 229 0 I Fax:+49 (0)5923/ 90 229 29
E-Mail: office@promesstec.com I Internet: www.promesstec.com

A.OUT

0-20	→	output range in mA
4-20	→	output range in mA
20-0	→	output range in mA
20-4	→	output range in mA

VAL.H

xxxx	→	set value for HIGH calibration point

USE.C

YES	→	use process calibration values?
NO		

promesstec GmbH I Niedersachsenstraße 4 I D- 48465 Schüttorf I Tel.:+49 (0)5923/ 90 229 0 I Fax:+49 (0)5923/ 90 229 29
E-Mail: office@promesstec.com I Internet: www.promesstec.com

13. configuration / operating the function keys

13.1 documentation for routing diagram

In general

When configuring the display you are guided through all parameters, you can choose the settings which fit the application. For each menu there is a scrolling help text which is automatically shown in the display, this starts after 5 seconds if no key has been activated.

Configuration is carried out by using the 3 function keys:

- ⌃ will increase the numerical value or choose the next parameter.
- ⌄ will decrease the numerical value or choose the previous parameter.
- OK will accept the chosen value and end the menu.

In function does not exist in the display all parameters are skipped to make the configuration as simple as possible.
Once the configuration has been entered the display will show „----„.

Pressing and holding OK will return to the previous menu or return to the default state (1.0) without saving the changed values or parameters.

If no key is activated for 2 minutes, the display will return to the default state (1.0) without saving the changed values or parameters.

13.2 further explanations

fast setpoint adjustment and relay test: These menus allow you to change the set point quickly and to check the operation of the relays.

Pressing ⌃ and ⌄ at the same time will change the state of the relay – this change is indicated by the diodes on the display. Pressing OK will save the set point change. Holding down OK for more than 0,5 seconds will return the unit to the default state without changing the set point.

password protection:
Using a password will stop access to the menu and parameters. There are two levels of password protection. Passwords between 0000...4999 allow access to the fast set point adjustment and relay test. (Using this password stops access to all other parts of the menu). Passwords between 5000…9999 stop access to all parts of the menu, fast set point and relay test (current set point is still shown). By using the master password 2008, all configuration menus are available.

promesstec GmbH I Niedersachsenstraße 4 I D- 48465 Schüttorf I Tel.:+49 (0)5923/ 90 229 0 I Fax:+49 (0)5923/ 90 229 29
E-Mail: office@promesstec.com I Internet: www.promesstec.com

13.3 Graphic depiction of the relay function setpoint

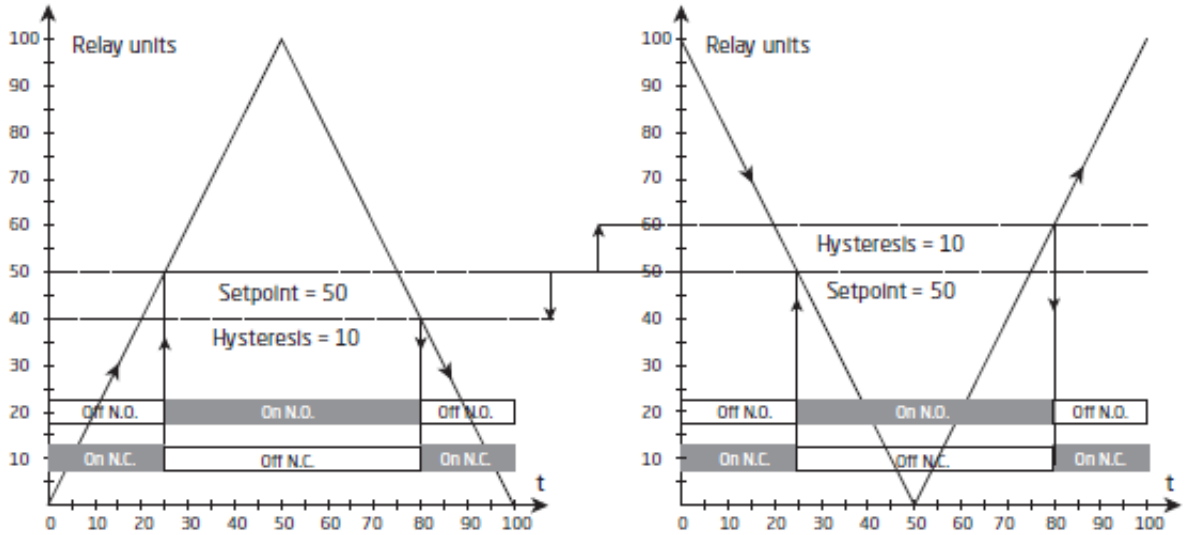

Relay action: Increasing

Relay action: Decreasing

promesstec GmbH I Niedersachsenstraße 4 I D- 48465 Schüttorf I Tel.:+49 (0)5923/ 90 229 0 I Fax:+49 (0)5923/ 90 229 29
E-Mail: office@promesstec.com I Internet: www.promesstec.com

14. Maintenance, Dismounting, Return, Liability, Cleaning and Disposal

14.1 Maintenance, Dismounting

Residual media in dismounted instruments can result in a risk of personnel, the environment and equipment. Take sufficient precautionary measures.

There is a risk of burns. Let the instrument cool down sufficiently before dismounting. During dismounting there is a risk of dangerously hot pressure media escaping.

14.2 Return

For return of the device use the original packaging or similar.
As protection against damage can be used, for example, antistatic film, insulating material, labeling as a sensitive measuring device.

14.3 Liability

To the extent the instructions in this manual are not strictly observed, the customer cannot advance a demand against promesstec GmbH that would otherwise exist according to the concluded sales agreement.

14.4 Cleaning

!

Before cleaning the device, disconnect the electrical connection.
Clean the device with damp towel.
Do not bring the electrical connection into contact with dampness.

When disconnected, the device may be cleaned with a cloth moistened with destilled water.

promesstec GmbH I Niedersachsenstraße 4 I D- 48465 Schüttorf I Tel.:+49 (0)5923/ 90 229 0 I Fax:+49 (0)5923/ 90 229 29
E-Mail: office@promesstec.com I Internet: www.promesstec.com

14.5 Disposal

Dispose of device components and packaging materials in an environmentally friendly manner in accordance with the country-specific waste treatment and disposal regulations.

Safety instructions

Please read the following safety instructions and mounting chapter 2 before installation and keep these instructions for future reference.

Warnung

Improper use or operation may result in personal injury and/or property damage.

Control of the device

The devices are checked before shipment and shipped in perfect condition. If any damage is visible on the device, we recommend a precise inspection of the transport packaging. In case of damage, please inform the supplier immediately.

15. Installation

Only technicians, who are familiar with the technical terms, warnings, and instructions in the manual and who are able to follow these, should connect the device.

Should there be any doubt as to the correct handling of the device, please contact your local distributor. However, you can also contact **promesstec GmbH** directly.

Mounting and connection of the device should comply with national legislation for mounting of electric materials, i.e. wire cross section, protective fuse, and location. Descriptions of input / output and supply connections are shown in the block diagram and side label.

The following apply to fixed hazardous voltages-connected devices:
The max. size of the protective fuse is 10 A and, togehter with a power switch, it should be easily accessible and close to the device. The power switch should be marked with a label telling it will switch off the voltage to the device.

promesstec GmbH I Niedersachsenstraße 4 I D- 48465 Schüttorf I Tel.:+49 (0)5923/ 90 229 0 I Fax:+49 (0)5923/ 90 229 29
E-Mail: office@promesstec.com I Internet: www.promesstec.com

16. order code

order code: UDA 100… **<u>order example:</u> UDA 100-B-B**

limit value

-A without limit value
-B with 2 limit value, 2 relay as changer
-C with 4 limit value, 4 relay as changer

analog output

-A without analog output
-B with analog output 0/4-20mA

promesstec GmbH I Niedersachsenstraße 4 I D- 48465 Schüttorf I Tel.:+49 (0)5923/ 90 229 0 I Fax:+49 (0)5923/ 90 229 29
E-Mail: office@promesstec.com I Internet: www.promesstec.com